SKH-M2T-Y

LED rotation beacon, IP66, Ø100mm 100-240V AC, terminal block/yellow

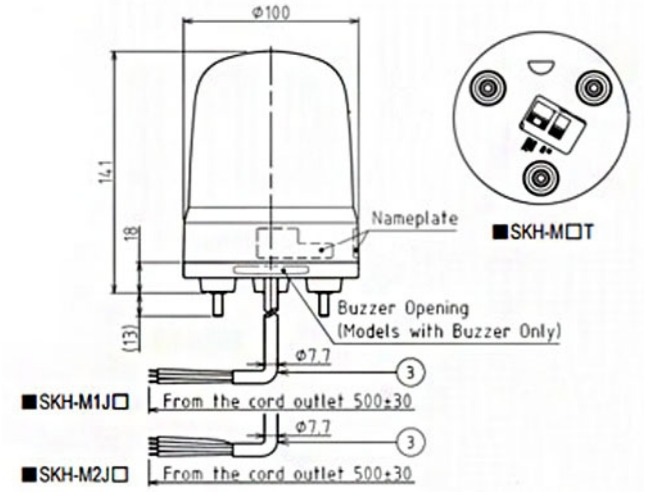

Specifications

Brand	Patlite
CE certificate	Yes
Cable length	500mm
Certificates, quality marks, markings	CE, cULus, EAC, KC
Colour lens	Yellow
Dimensions	Ø100mm x 141mm
Impact resistance	4,5G
Ingress protection	IP23 / IP65 with rubber gasket
LED life	100 000h
Light patterns	Rotating
Luminous intensity	8000cd
Material	Polycarbonate

Mounting and connection type	3-screw mounting/terminal block
Operating temperature	-10°C to +50°C
Operating voltage	90-250V AC
Particularities	Rotates 120x/minute
Rated current	100V AC 0,07A / 240V AC 0,04A
Rated voltage	100-240V AC (50/60Hz)
Relative humidity	Less than 90% (no condensation) at 20°C
Type	Pre-configured
UL certificate	Yes
Voltage	115V AC / 230V AC
Weight	330g